black hat®
EUROPE 2023

DECEMBER 4–7

EXCEL LONDON / UK

black hat EUROPE 2023

Evils in the Sparse Texture Memory: Exploit Kernel Based on Undefined Behaviors of Graphic APIs

Xingyu Jin, Richard Neal, Tony Mendez

Xingyu
@1ce0ear
Senior Security Engineer

Richard
@ExploitDr0id
Staff Security Engineer

Tony
@amdz23
Technical Program Manager

Agenda

- Part 1
  - Android GPU Security Review
  - Graphics Stack and PowerVR Driver
  - More places to find bugs
  - Evils in the Sparse Texture Memory
  - Root Exploit Demonstration
- Part 2
  - Finding vulnerabilities and exploits
  - Android Partner Vulnerability Initiative

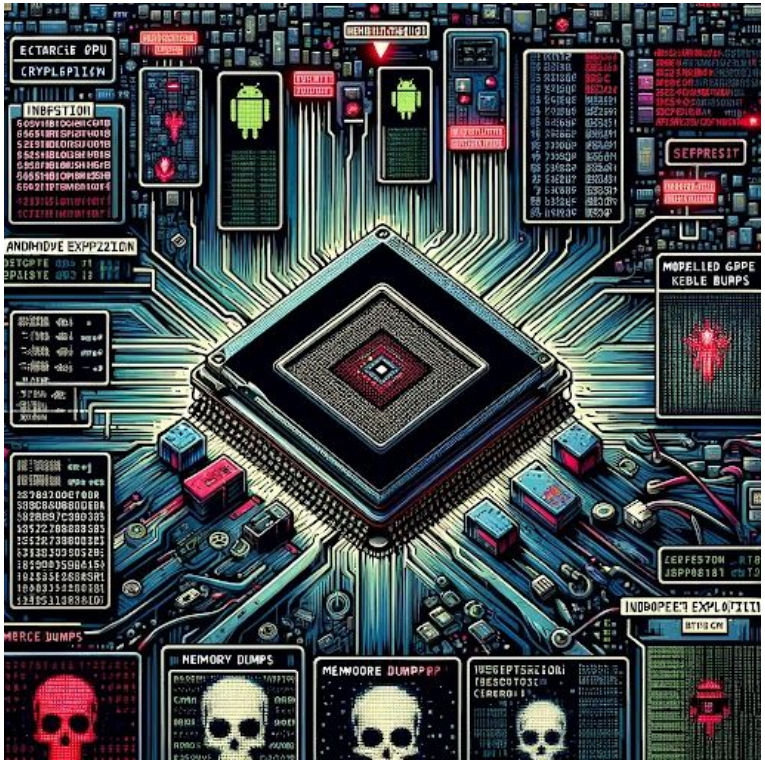

Image by DALL·E

All vulnerabilities mentioned in this talk were already publicly disclosed and patches were available by the affected vendor.

Android GPU Security: Current State

State of GPU Security on Android

- Significant {0,1,n}day attacks targeting GPU drivers

CVE-2022-22706, a vulnerability in Mali GPU Kernel Driver fixed by ARM in January 2022 and marked as being used ... ad not included a fix for this vulner...

CVE-2023-4211 Known To Be Under Targeted Attack

The second zero-day vulnerability, CVE-2023-4211, included within the October security update, ... limited, targeted ... points to there b... users.

Qualcomm is warning of three zero-day vulnerabilities in its GPU and Compute DSP drivers that hackers are actively exploiting in attacks.

The American semiconductor company was told by Google's Threat Analysis Group (TAG) and Project Zero teams that **CVE-2023-33106, CVE-2023-33107**, **CVE-2022-22071**, and **CVE-2023-33063** may be under limited, targeted exploitation.

Qualcomm says it has released security updates that address the issues in its Adreno GPU and Compute DSP drivers, and impacted OEMs were also notified.

State of GPU Security on Android

- **GPU Security is still vastly under-researched**
  - Complicated, Proprietary, New features…
- **Project Zero blog "Mind the Gap"**
- **Major Android GPUs:**
  - ARM: Mali GPU
  - Qualcomm: Adreno GPU
  - Imagination Technologies: PowerVR GPU

Imagination

PowerVR GPU by ImgTec

- Apple's former GPU maker
- Popular on budget-friendly phone, tablet & TV
  - *Samsung A12, RedMi 9a/10a, Moto Pure G, Fire TV*

Apple Replacing PowerVR With In-House GPU

It means future Apple devices will no longer user PowerVR GPUs, ending a long relationship with Imagination Technologies.

By Matthew Humphries April 3, 2017

Imagination in Mobile

Imagination's PowerVR GPU is the original tile-based deferred rending architecture, designed to deliver the ultimate in performance density and power efficiency. Our GPU technology paved the way for the smartphone-based mobile gaming revolution. Today, backed by our thriving ecosystem, over 35% of smartphones feature PowerVR, which continues to deliver everything our customers need as we push the boundaries for graphics and compute.

PowerVR GPU by ImgTec

Most shipped smartphone in 2021

Rank	Model Name	Company	Million Units	ASP ($)	
1	Galaxy A12	Samsung	51.8	160	PowerVR
2	[illegible]	[illegible]	[illegible]	[illegible]	
3	[illegible]	[illegible]	[illegible]	[illegible]	
4	[illegible]	[illegible]	[illegible]	[illegible]	
5	Redmi 9A	Xiaomi	26.8	78	PowerVR
6	[illegible]	[illegible]	[illegible]	[illegible]	
7	[illegible]	[illegible]	[illegible]	[illegible]	
8	[illegible]	[illegible]	[illegible]	[illegible]	
9	[illegible]	[illegible]	[illegible]	[illegible]	
10	Galaxy A02	Samsung	18.3	138	PowerVR

Source: Omdia Smartphone Model Market Tracker 4Q21

96.9 M

PowerVR GPU Security

- **Limited research before 2022**
- **More research kicks off in 2022**
  - Google Android Security Team
    - https://bugs.chromium.org/p/apvi
  - Google Project Zero

	ID	Status	Restrict	Reported	Vendor	Product	Finder	Summary + Labels
☆	2494	Fixed	----	2023-Jun-22	Imagination	PowerVR	jannh	PowerVR: several bugs in PowerVR GPU driver memory management CCProjectZeroMembers
☆	2465	Fixed	----	2023-Jul-3	Imagination	PowerVR	jannh	PowerVR: two more LPE security bugs CCProjectZeroMembers

  - More engagement with external security researchers

Android Graphic Stack & PowerVR Driver Introduction

Android Graphic Stack Overview

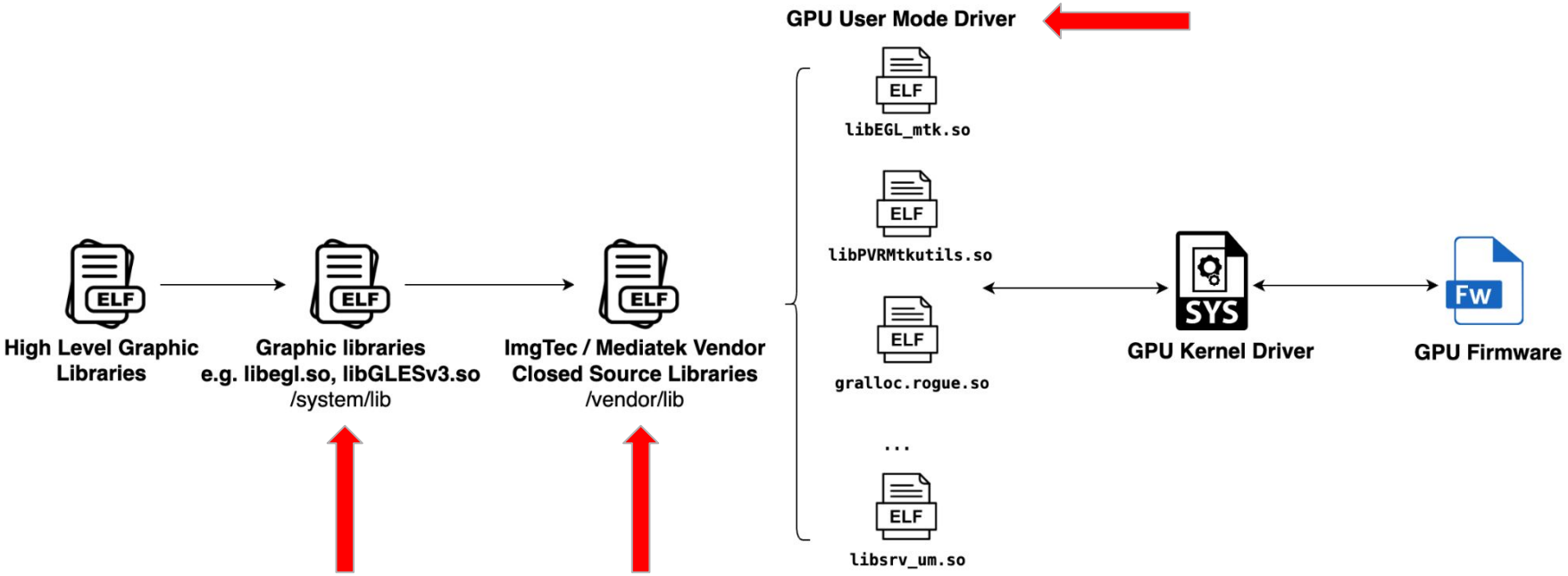

GPU vendors have different UMD implementations

OpenGL Impl: ImgTec & MediaTek

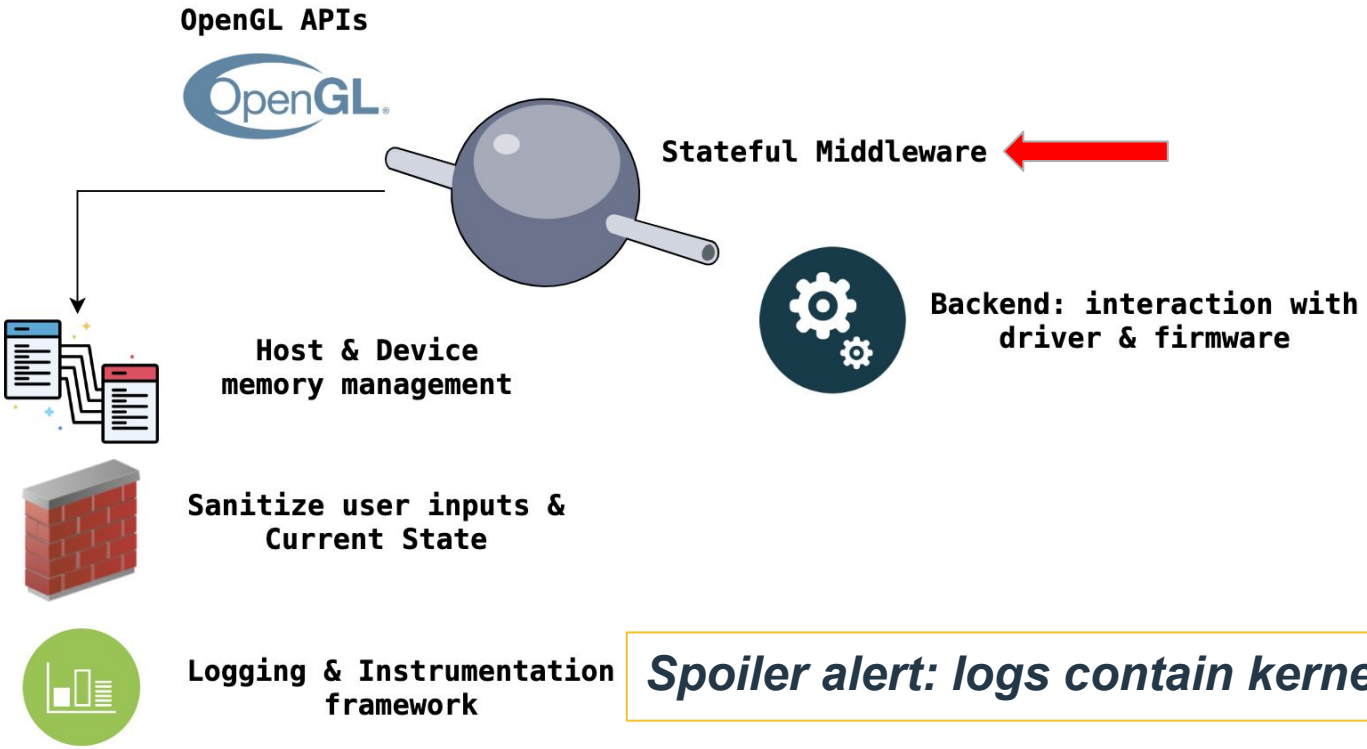

Spoiler alert: logs contain kernel pointers

OpenGL Impl: ImgTec & MediaTek

OpenGL API
glMapBufferRange

Allocate GPU memory

PVRSRVAcquireCPUMappingMIW → Return CPU usermode address

Usermode

Kernel mode

Memory Mapping
CPU VA <-> Physical Page handle <-> GPU VA

Bridge APIs

PVR Driver: PMR & MMU Context

- **Physical Memory Resource (PMR)**
  - Manage allocated physical pages
- **GPU MMU Management**
  - MMU Context Object
  - GPU Memory Heap
  - GPU Memory Reservation

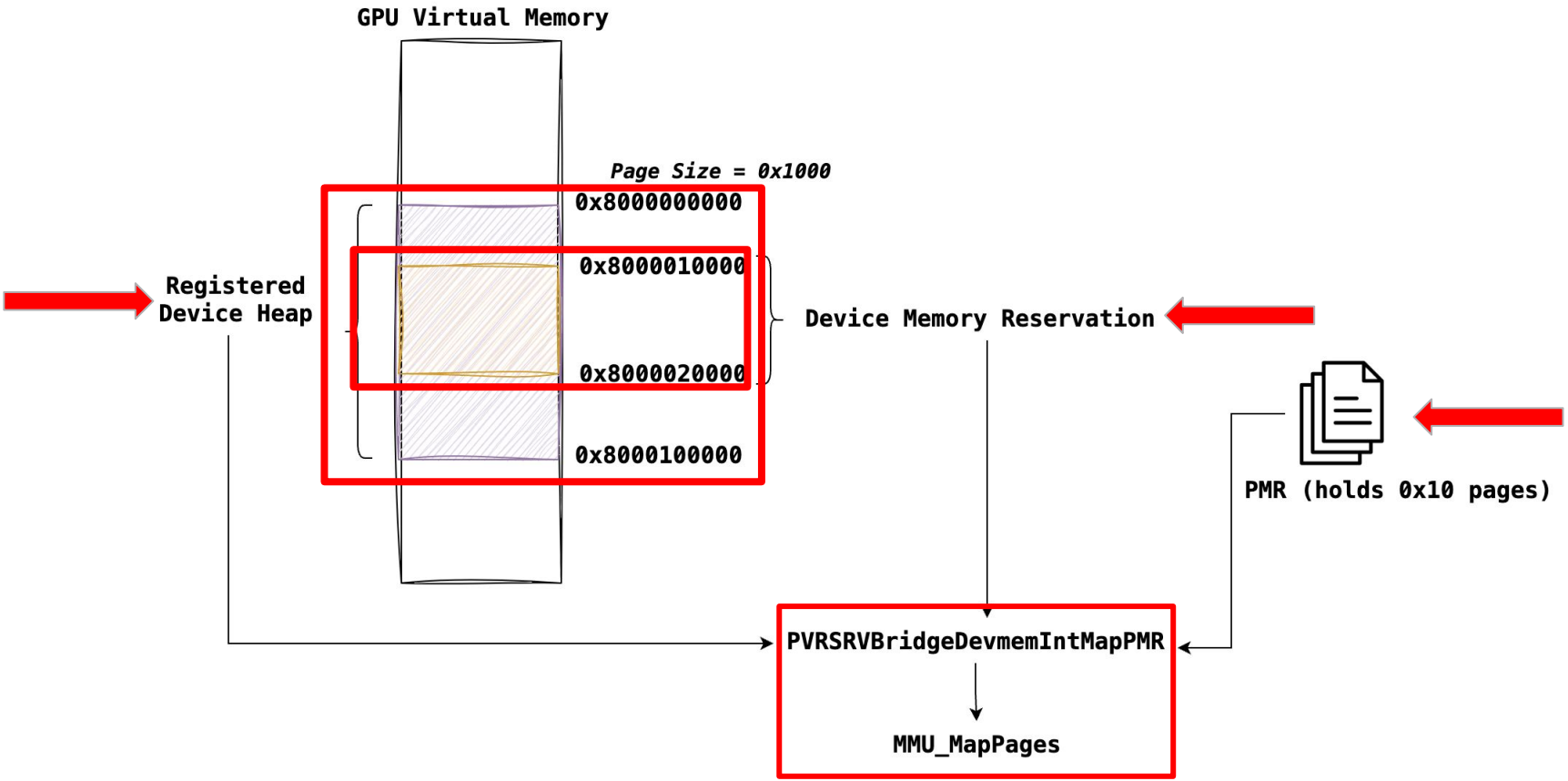

PVR Driver: Map CPU pages

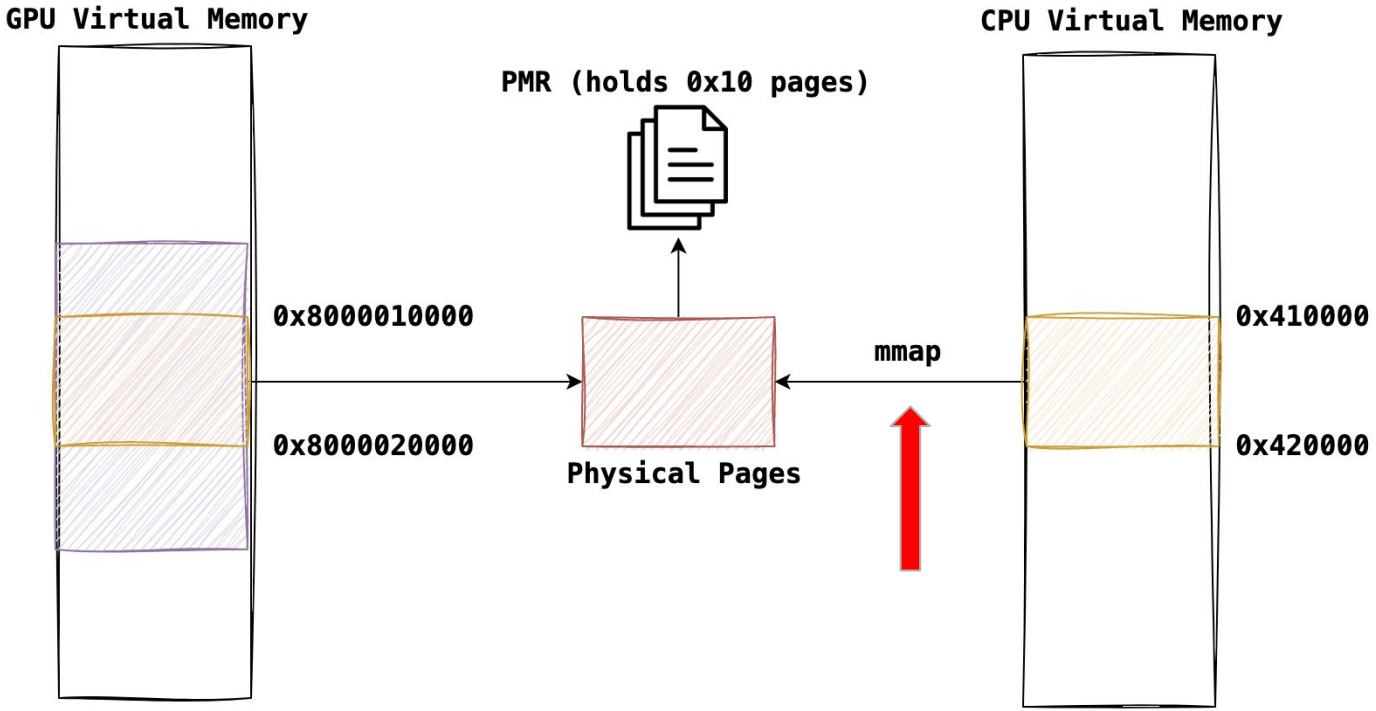

Thoughts about finding more bugs

Thoughts: how to find more bugs

- **Difficulties**
  - Too many bridge APIs, some of them are arcane
- **Thoughts**
  - Instrument / Reverse vendor graphic libraries

```
tracer.cpp:167 uiSize = {0x190000}
tracer.cpp:169 uiChunkSize = {0x1000}
tracer.cpp:171 ui32NumPhysChunks = {0x0}
tracer.cpp:173 ui32NumVirtChunks = {0x190}
tracer.cpp:175 pui32MappingTable = {0xb400007213629e00}
tracer.cpp:177 ui32Log2PageSize = {0xc}
tracer.cpp:179 uiFlags = {0x40331}
tracer.cpp:181 ui32AnnotationLength = {0x12}
tracer.cpp:183 puiAnnotation = {0x7ffdc964a8}
tracer.cpp:185 ui32PID = {0x68f0}
tracer.cpp:187 ui32PDumpFlags = {0x0}
tracer.cpp:197 puiAnnotation = {SCBUF:VERTEX_DATA}
tracer.cpp:209 Printing pui32MappingTable
tracer.cpp:216 ++++++++++++++++++++++++++++++++++++++++++++++++++++++++++
tracer.cpp:228 hPMR created = 0x5f
tracer.cpp:260 PVRSRV_BRIDGE_MM bridge group! func id = {21}
tracer.cpp:260 PVRSRV_BRIDGE_MM bridge group! func id = {19}
tracer.cpp:101 MMAP Analyzer: addr = {0x0}, len = {0x190000}, prot = {0x3}, flags = {0x1}, fd = {0x6}, offset = {0x5f000}
tracer.cpp:116 mmap address = 0x72053ff000
```

Instrument & Fuzz Graphic APIs

- Instrument on a real 3D app by ***PLT function hook***
- Lightweight fuzzing: mutate parameters, scramble memory…

Reading OpenGL / Vulkan APIs

- Any complaints about GPU driver kernel crash when using certain OpenGL / Vulkan APIs?

AMD COMMUNITIES BLOGS GROUPS SUPPORT FORUMS Help Sign In

AMD Community › Communities › Developers › OpenGL & Vulkan › OpenGL ARB_sparse_texture (Driver crash, texture i... Options

03-06-2019 05:27 PM

OpenGL ARB_sparse_texture (Driver crash, texture issues)

Currently we (PCSX2 Team) are trying to implement Sparse Texture support and seem to have stumbled on to several issues on AMD cards which are not present at all on Nvidia (tested by several people).

Major issue: Garbage textures on amd cards whenever sparse is enabled.
Major issue: As of 19.3.1 enabling Sparse also causes a driver crash on amd cards, this wasn't an issue on the previous driver 19.2.3 where it just caused garbage textures, driver 19.2.1 or 19.2.2 just caused an entire black screen window. So far 19.2.3 seems to behave the best out of the bunch that were tested.

Undefined Behaviors in Graphic APIs *(GL_EXT_sparse_texture)*

OpenGL: Sparse Texture API

- GL_EXT_sparse_texture
  - Proposed in 2013 by Nvidia
- Most GPU vendors support it nowadays

```
New Procedures and Functions

        void TexPageCommitmentEXT(enum target,
                                  int level,
                                  int xoffset,
                                  int yoffset,
                                  int zoffset,
                                  sizei width,
                                  sizei height,
                                  sizei depth,
                                  boolean commit);
```

```
Name

    EXT_sparse_texture

Name Strings

    GL_EXT_sparse_texture

Contributors

    Dominik Witczak, Mobica
    Contributors to ARB_sparse_texture

    Xi Chen, NVIDIA

Contact

    Daniel Koch, NVIDIA Corporation (dkoch 'at' nvidia.com)

Notice

    Copyright (c) 2013 The Khronos Group Inc. Copyright terms at
        http://www.khronos.org/registry/speccopyright.html

    Portions Copyright (c) 2014 NVIDIA Corporation.

Status

    Complete.

Version

    Last Modified Date:         27/03/2015
    Revision:                   3
```

OpenGL: Sparse Texture API

- Why Sparse texture API?
- Create a resource that is larger than physical memory
  - but only has a small portion of that resource actually backed by physical memory.

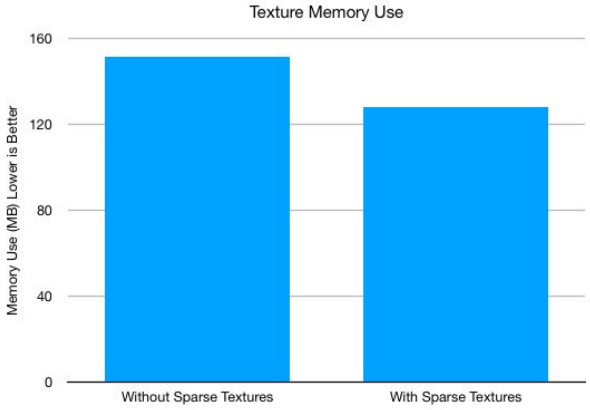

https://github.com/gpuweb/gpuweb/issues/455

Low Level Implementation

- Graphic API: Invoke kernel APIs

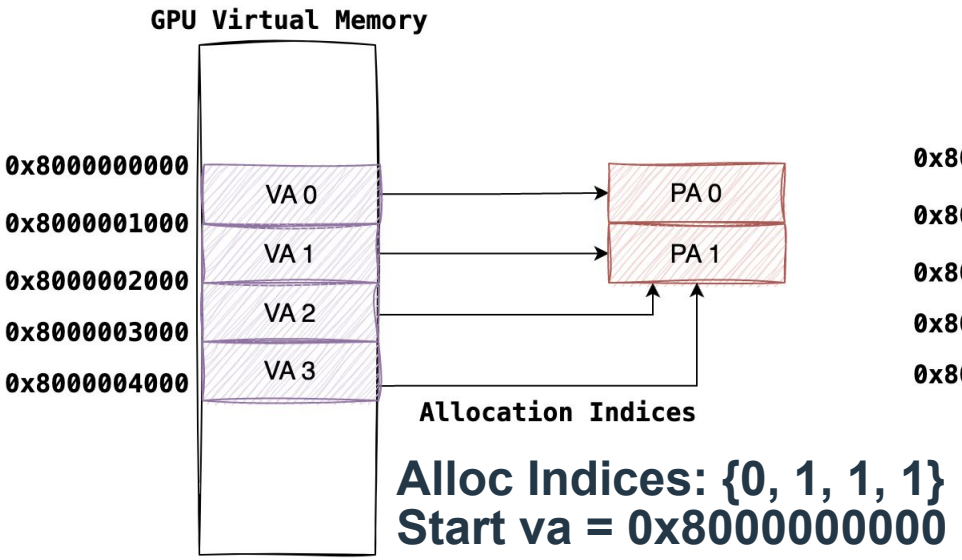

Alloc Indices: {0, 1, 1, 1}
Start va = 0x8000000000

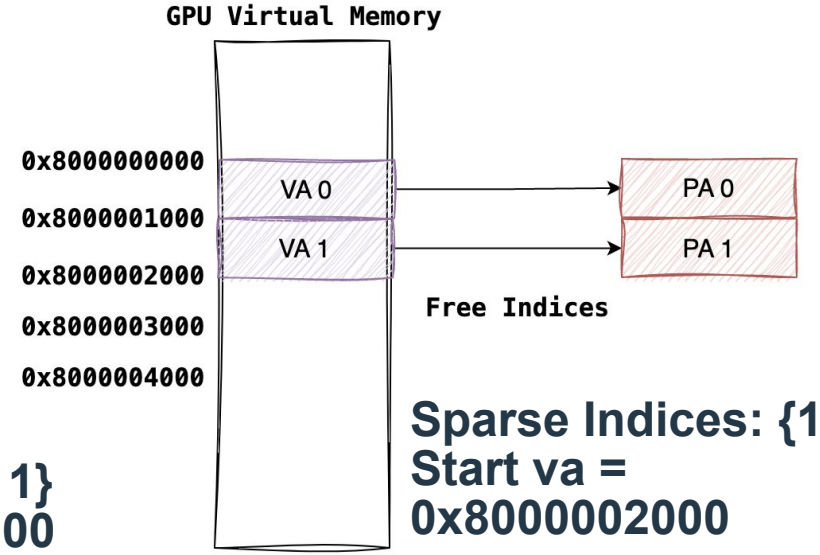

Sparse Indices: {1, 1}
Start va = 0x8000002000

Undefined Behavior in OpenGL Document

- If the value of commit is FALSE, then the texture pages contained in the region are made **de-committed**. **Their *physical* store is de-allocated**, and their contents again become **undefined**.
- Reads from such regions (***uncommitted***) produce **undefined data**, but otherwise have no adverse effect.
- Atomic operations with return values on **uncommitted regions** will complete normally, but **the returned value will be undefined** and the result of the … will be discarded.
- Writes to such regions are ignored. The GL may attempt to write to **uncommitted** regions but the effect of doing so will be **benign**.

Sparse Texture API Under the Hood

- Step 1: Allocate Sparse texture memory
  - `glTexPageCommitmentEXT(..., /*commit=*/GL_TRUE);`

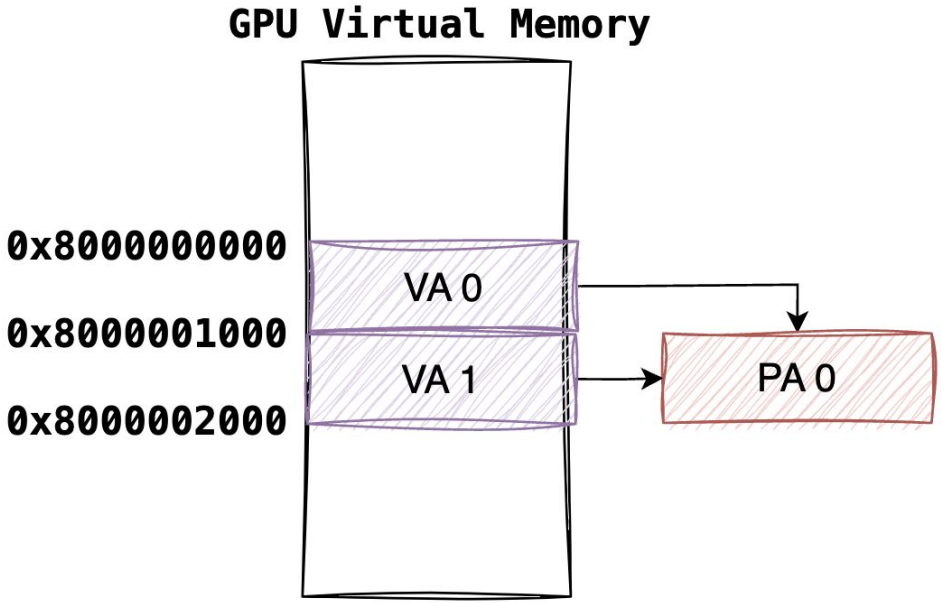

Sparse Texture API Under the Hood

- Step 2: Initialize Textures
  - `glTexSubImage3D(..., /*ptr=*/image_ptr);`

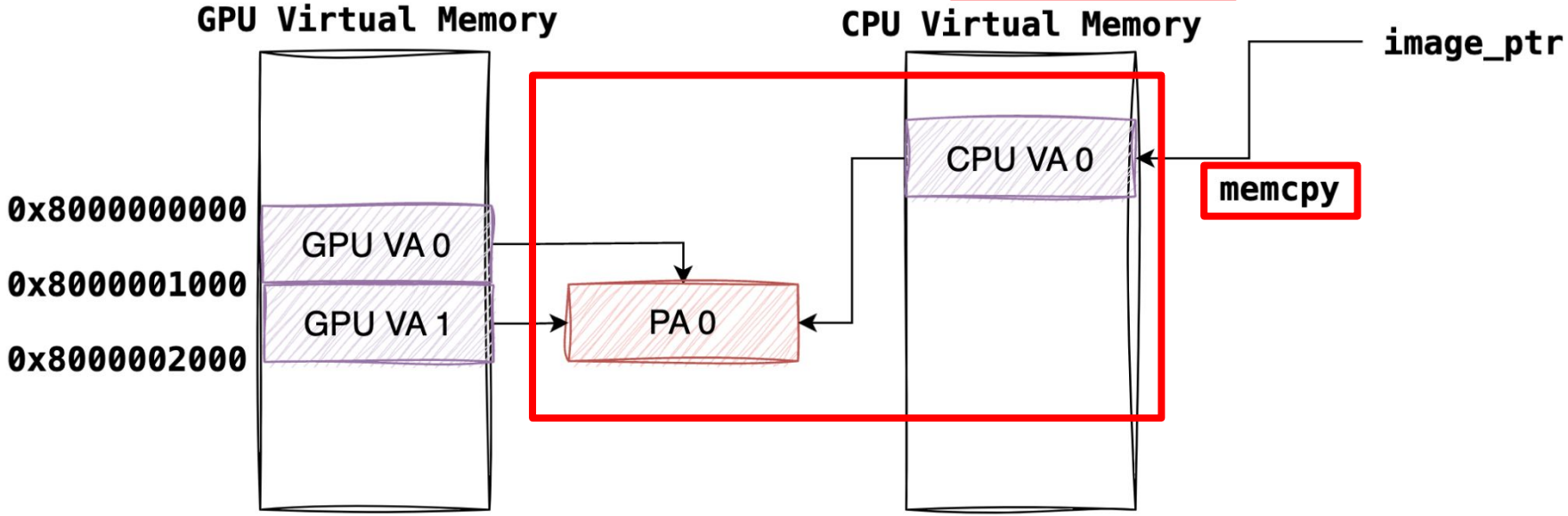

Sparse Texture API Under the Hood

- Step 2: Initialize Textures
  - `glTexSubImage3D(..., /*ptr=*/image_ptr);`

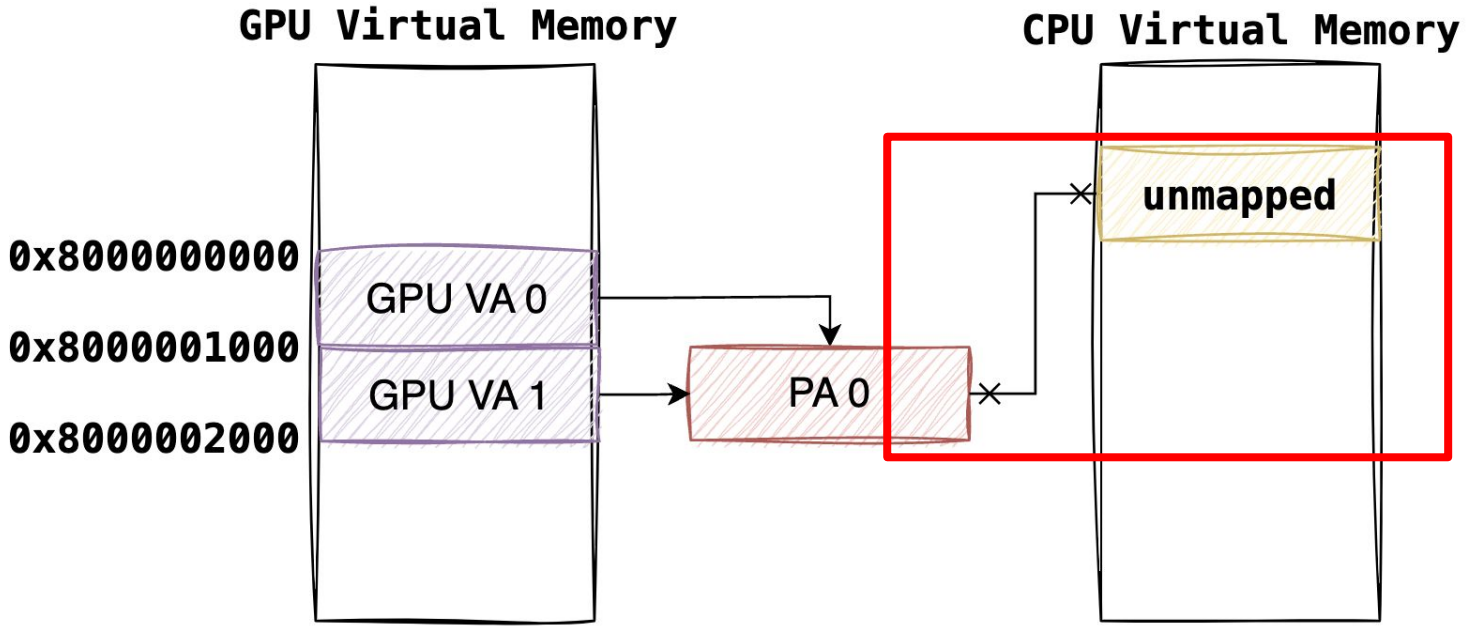

Sparse Texture API Under the Hood

- Final step: Destroy the sparse texture
  - `glTexPageCommitmentEXT(..., /*commit=*/GL_FALSE);`

- Look secure!
  - Not possible to remap the sparse texture on GPU to CPU because it's already destroyed

Additional Mapping by ourselves

- Accessing “undefined memory” from CPU

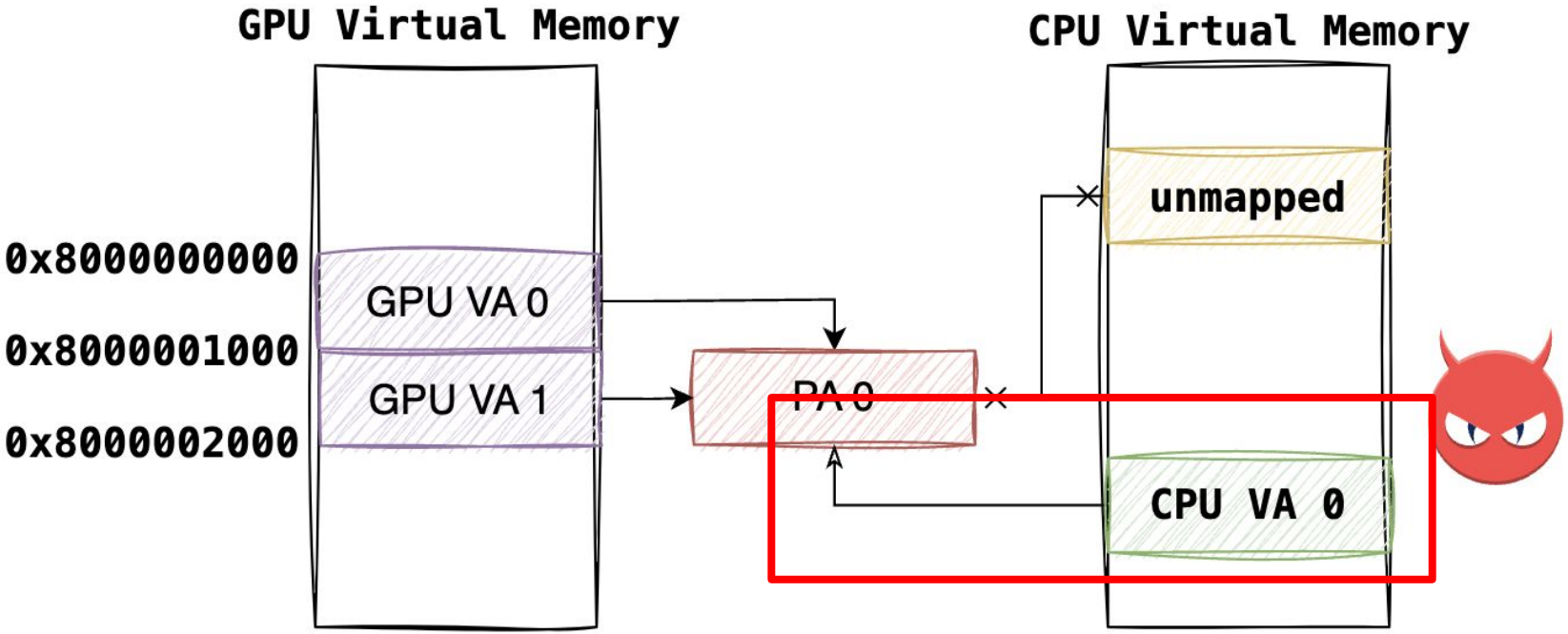

Issues in Implementing Sparse Texture

- Problem 1: object read / write OOB
- Problem 2: ref issues

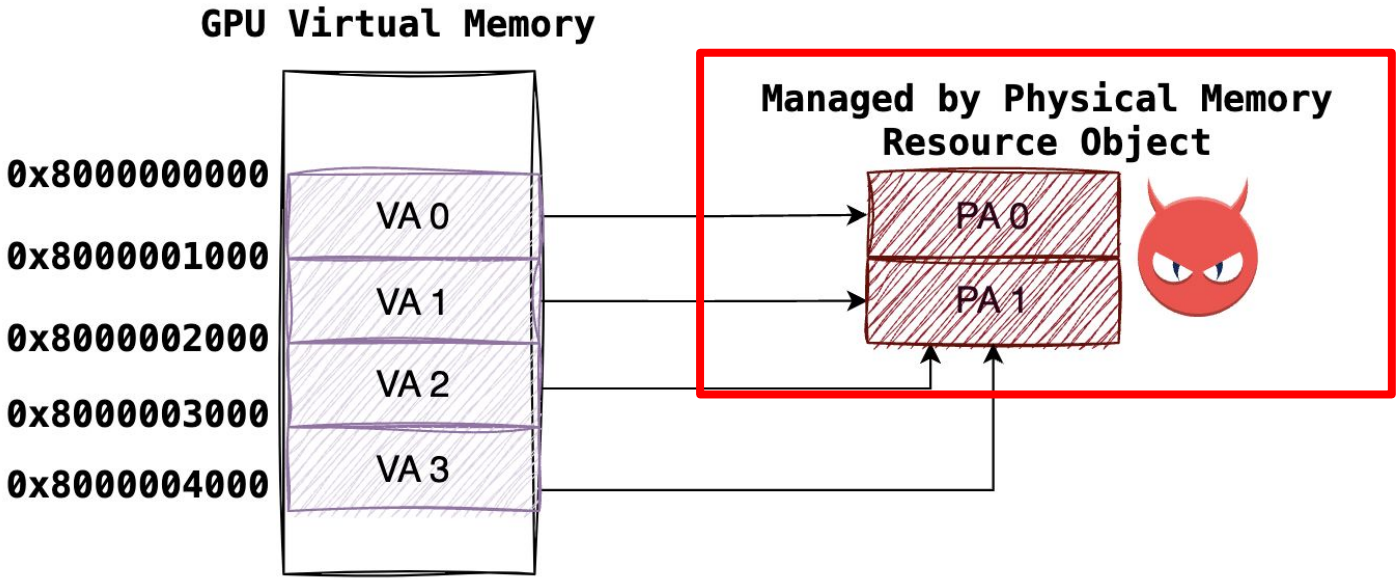

Issues in Implementing Sparse Texture

- Problem 3: GPU start VA passed from userspace

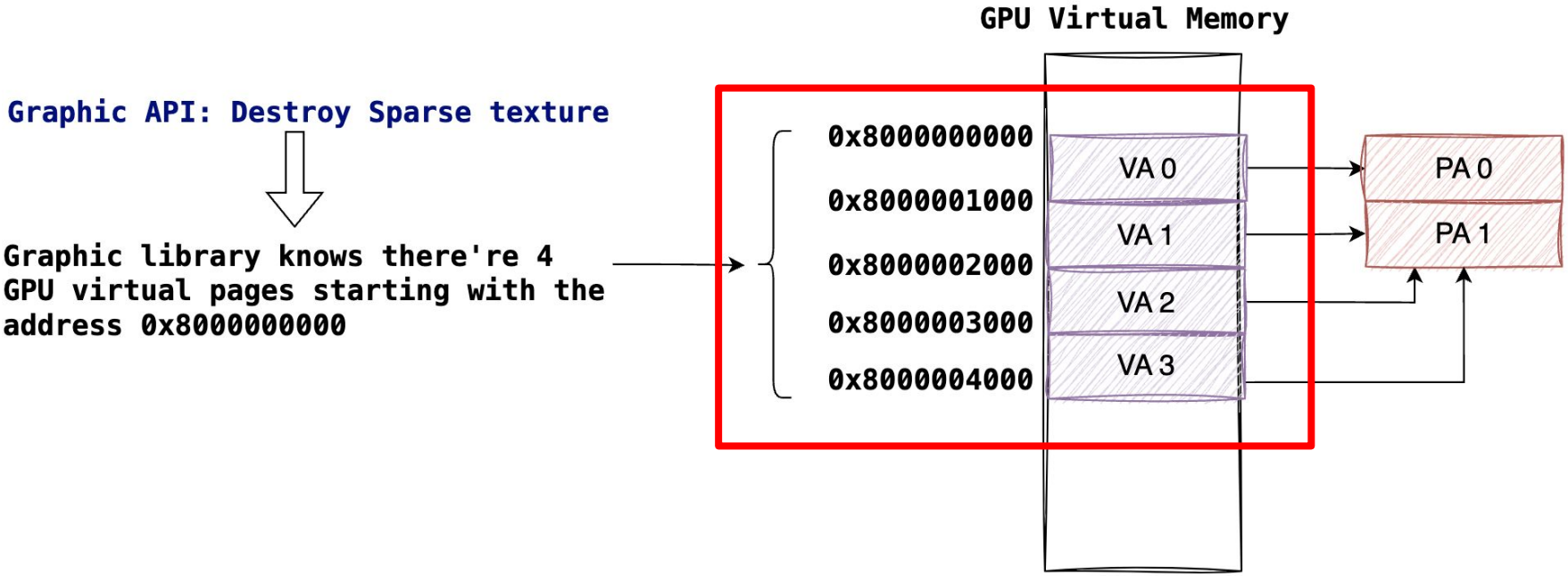

Issues in Implementing Sparse Texture

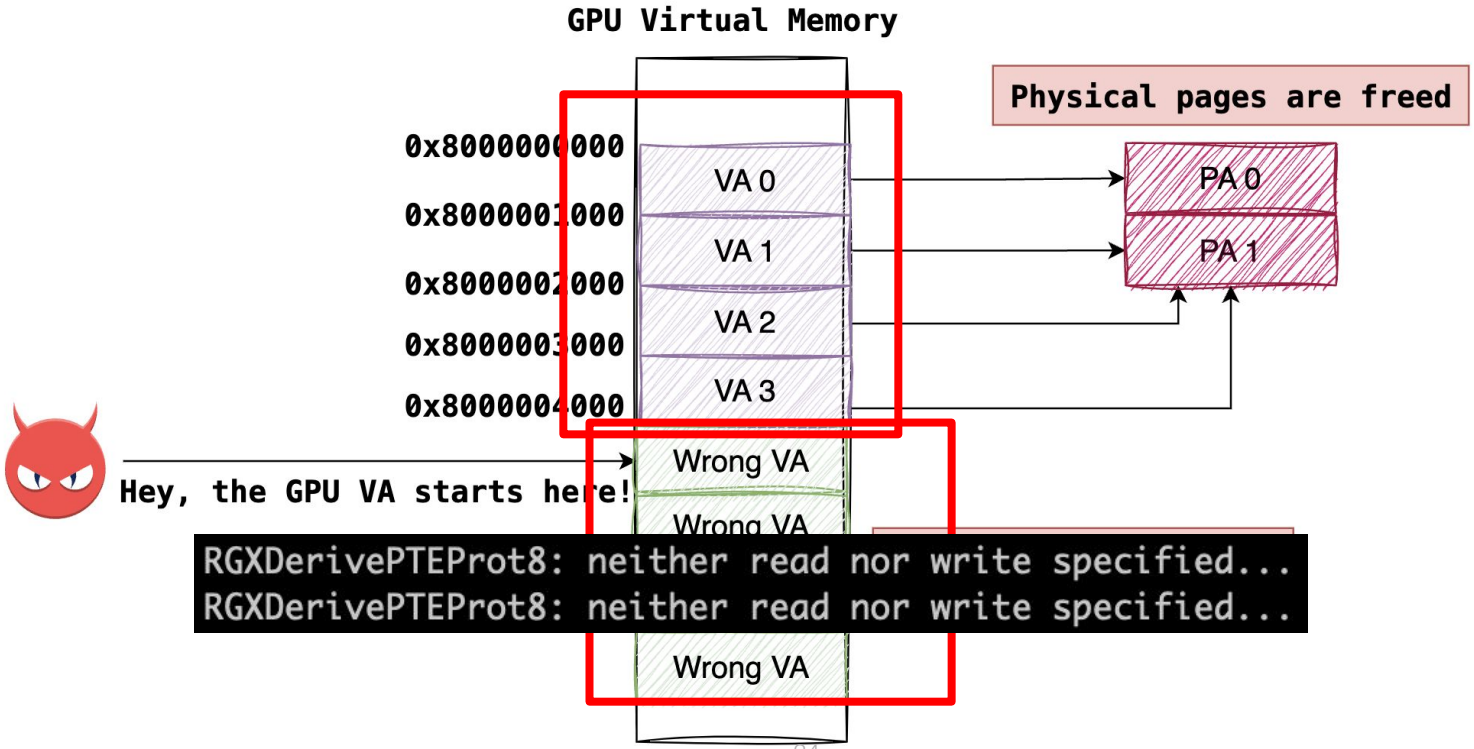

Corrupting GPU Page Tables

- GPU Heap memory layout
- PowerVR has FANCY page tables
  - Supports different page size: ***4K, 16K, 64K, 256K, 1M, 2M***

```
Name = General SVM, sDevVAddrBase.uiAddr = 400000, uiHeapLength = 7fffc00000
Name = Vulkan capture replay buffer, sDevVAddrBase.uiAddr = bfc0000000, uiHeapLength = 40000000
Name = General, sDevVAddrBase.uiAddr = 8000000000, uiHeapLength = 3fc0000000
Name = RgnHdr BRN63142, sDevVAddrBase.uiAddr = dbf0000000, uiHeapLength = 10000000
Name = General NON-4K, sDevVAddrBase.uiAddr = c000000000, uiHeapLength = 1000000000
Name = VisTest, sDevVAddrBase.uiAddr = dc00000000, uiHeapLength = 100000
PDS Code and Data, sDevVAddrBase.uiAddr = da00000000, uiHeapLength = 100000000
Name = USC Code, sDevVAddrBase.uiAddr = e000000000, uiHeapLength = 100000000
Name = TQ3DParameters, sDevVAddrBase.uiAddr = e400000000, uiHeapLength = 400000000
Name = TDM TPU YUV Coeffs, sDevVAddrBase.uiAddr = ea00080000, uiHeapLength = 40000
Name = FwMain, sDevVAddrBase.uiAddr = e1c0000000, uiHeapLength = 1ef0000
Name = FwConfig, sDevVAddrBase.uiAddr = e1c1ff0000, uiHeapLength = 10000
```

Corrupting GPU Page Tables

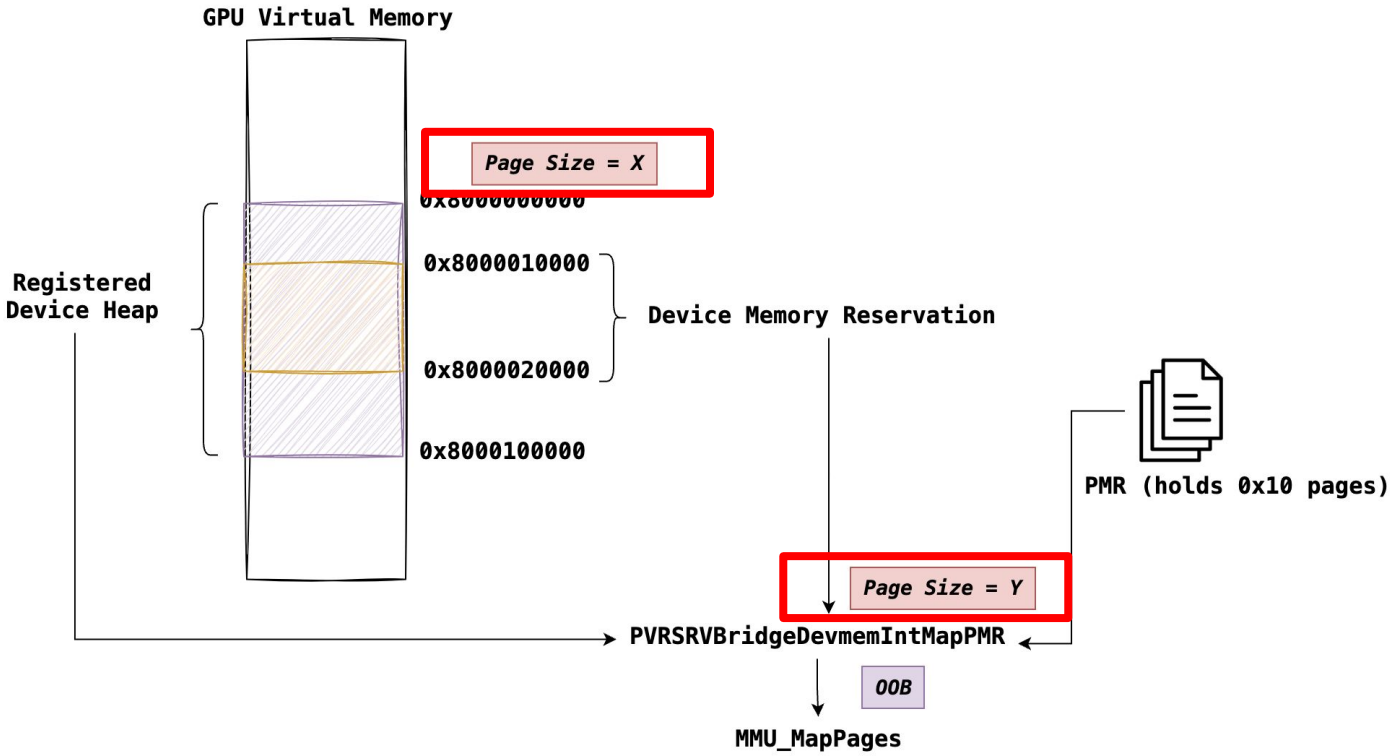

The feature was there “forever”…

- The buggy sparse feature was introduced a decade ago
- Some of our other findings also exist a decade ago.

P0

Project Zero Bugs @ProjectZeroBugs · Sep 19

Arm Mali: driver exposes physical addresses to unprivileged userspace
bugs.chromium.org/p/project-zero…

1 4 36

w0
@jgrusko

Replying to @ProjectZeroBugs

RIP the feature that was there forever and nobody wanted to report :)

7:56 PM · Sep 19, 2022 · TweetDeck

Rooting Device

Image by DALL·E

Exploit Page Use-after-free

- Graphic APIs + one mmap
- Various Ways to Root devices
  - Attacking page tables (KSMA / GPU MMU)

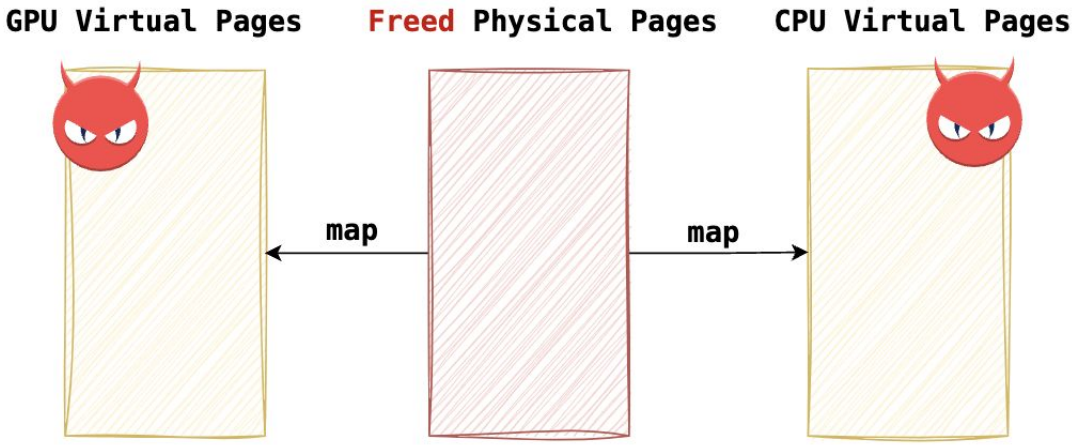

OpenCL R/W

```
00000f00  00 00 00 00 00 00 00 00 00 00 00 00 11 20 f5 f2  |............ ..|
00000f10  01 00 00 00 00 00 00 00 00 00 00 00 00 00 00 00  |................|
00000f20  00 00 00 00 06 07 2a 00 73 65 6c 69 6e 75 78 75  |......*.selinuxu|
00000f30  3a 6f 62 6a 65 63 74 5f 72 3a 70 72 69 76 61 70  |:object_r:privap|
00000f40  70 5f 64 61 74 61 5f 66 69 6c 65 3a 73 30 3a 63  |p_data_file:s0:c|
00000f50  35 31 32 2c 63 37 36 38 00 00 00 00 09 01 1c 00  |512,c768........|
00000f60  63 01 7f 04 00 51 4e 65 e5 e6 c8 fe e6 28 ad 51  |c....QNe.....(.Q|
00000f70  ba 18 cb ba cb d4 13 62 aa 83 58 7b e3 00 00 00  |.......b..X{....|
00000f80  00 00 00 00 00 00 00 00 00 00 00 00 00 00 00 00  |................|
00000f90  00 00 00 00 00 00 00 00 00 00 00 00 00 00 00 00  |................|
00000fa0  00 00 00 00 00 00 00 00 00 00 00 00 00 00 00 00  |................|
00000fb0  00 00 00 00 00 00 00 00 00 00 00 00 00 00 00 00  |................|
00000fc0  00 00 00 00 00 00 00 00 00 00 00 00 00 00 00 00  |................|
00000fd0  00 00 00 00 00 00 00 00 00 00 00 00 00 00 00 00  |................|
00000fe0  00 00 00 00 00 00 00 00 21 14 00 00 21 14 00 00  |........!...!...|
00000ff0  01 00 00 00 a8 04 b1 0b 1f c1 ca 35 3a 32 02 00  |...........5:2..|
00000000  f9 41 0c 05 b9 27 00 00 b9 27 00 00 02 00 00 00  |.A...'...'......|
00000010  a0 0d 00 00 00 00 00 00 01 00 00 00 00 00 00 00  |................|
00000020  ae 84 14 62 00 00 00 00 2d de ed 61 00 00 00 00  |...b....-..a....|
00000030  2d de ed 61 00 00 00 00 4c 61 7a 24 0c 53 53 1d  |-..a....Laz$.SS.|
00000040  0c 53 53 1d 0d bf dc ca 00 00 00 00 00 00 00 00  |.SS.............|
00000050  00 10 00 00 b1 0d 00 00 10 00 00 00 c3 81 3e 63  |..............>c|
00000060  b1 cf 43 7b 62 87 9e de d8 f3 4e 6e 00 00 00 00  |..C{b.....Nn....|
```

Exploit Page Use-after-free

- Control page table
- Nullify all kernel mitigations

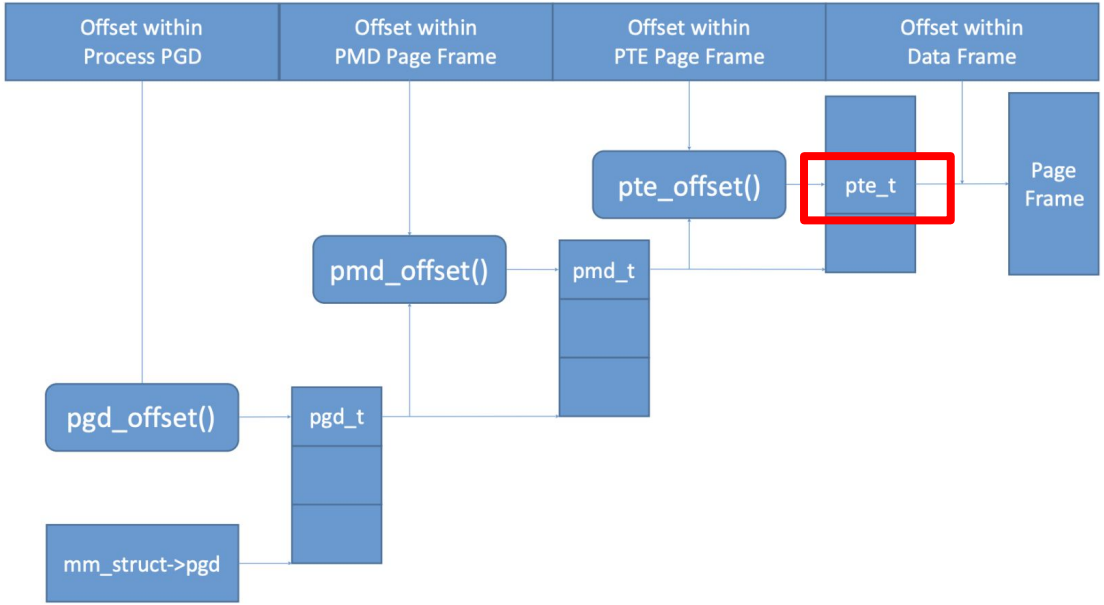

Image from asia-18-WANG-KSMA-Breaking-Android-kernel-isolation-and-Rooting-with-ARM-MMU-features

Rooting Device in 10s

Finding vulnerabilities

Finding other peoples' exploits

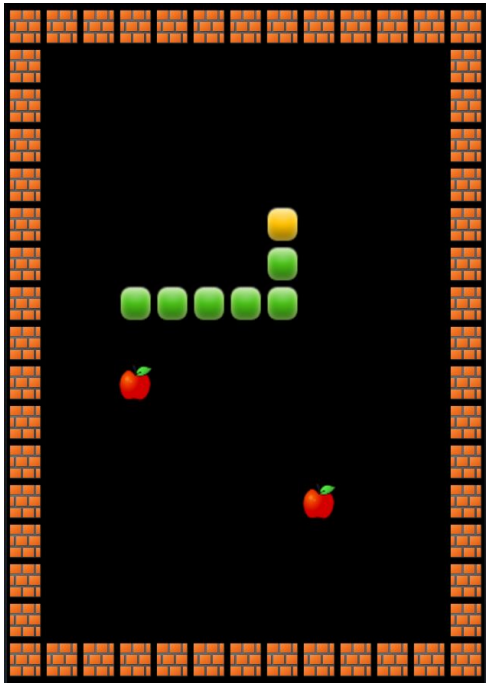


79% 11:51
bionicnews
Ieri 10:58
Visita crepaccio novità estate Cervinia
Visitare un crepaccio, ovvero una profonda fenditura che si apre sul ghiacciaio. E' la novità dell'estate a Cervinia, la nota località turistica valdostana. © ANSA
Ieri 10:11
Aliblue: pronti rimborsi per stop voli
Italia
Il mondo

```
exec("/system/bin/cmd package install -r -d -t /data/local/tmp/app-debug.apk\n", v2, 10);
exec(
  "/system/bin/cmd package grant com.[redacted] android.permission.ACCESS_COARSE_LOCATION\n",
  v2,
  1);
exec("/system/bin/cmd package grant com.[redacted] android.permission.ACCESS_FINE_LOCATION\n", v2, 1);
exec(
  "/system/bin/cmd package grant com.[redacted] android.permission.ACCESS_BACKGROUND_LOCATION\n",
  v2,
  1);
exec("/system/bin/cmd package grant com.[redacted] android.permission.CAMERA\n", v2, 1);
exec("/system/bin/cmd package grant com.[redacted] android.permission.GET_ACCOUNTS\n", v2, 1);
exec(
  "/system/bin/cmd package grant com.[redacted] android.permission.PROCESS_OUTGOING_CALLS\n",
  v2,
  1);
exec("/system/bin/cmd package grant com.[redacted] android.permission.RECORD_AUDIO\n", v2, 1);
exec("/system/bin/cmd package grant com.[redacted] android.permission.RECEIVE_SMS\n", v2, 1);
exec("/system/bin/cmd package grant com.[redacted] android.permission.READ_CALENDAR\n", v2, 1);
exec("/system/bin/cmd package grant com.[redacted] android.permission.READ_CALL_LOG\n", v2, 1);
exec("/system/bin/cmd package grant com.[redacted] android.permission.READ_CONTACTS\n", v2, 1);
exec("/system/bin/cmd package grant com.[redacted] android.permission.READ_EXTERNAL_STORAGE\n", v2, 1);
exec("/system/bin/cmd package grant com.[redacted] android.permission.READ_PHONE_STATE\n", v2, 1);
exec("/system/bin/cmd package grant com.[redacted] android.permission.READ_SMS\n", v2, 1);
exec("/system/bin/cmd package grant com.[redacted] android.permission.SEND_SMS\n", v2, 1);
exec("/system/bin/cmd package grant com.[redacted] android.permission.SYSTEM_ALERT_WINDOW\n", v2, 1);
exec("/system/bin/cmd package grant com.[redacted] android.permission.WRITE_CALENDAR\n", v2, 1);
```

```
rule NP_AMRootingSignals__EasyRoot {
  meta:
    desc = "EasyRoot exploit binary"
    rs1 = "020abf8c687168abae9f4d202ba644d5c9eebafd39442ec28b95c55b459e8a37"
  strings:
    $a = "easyroot"
    $b = "get root failed..."
    $c = "get root success..."
  condition:
    uint16(0) == 0x457f and all of them
}
```

```
int length = __system_property_get("ro.build.fingerprint", fingerprint);
printf("%s\n", fingerprint);
if (!strcmp(fingerprint, "google/oriole/oriole:12/SD1A.210817.037/7862242:user/release-keys")) {
  do_bad_thing_with_params(a, b, c);
  return;
}
if (!strcmp(fingerprint, "google/oriole/oriole:12/SQ1D.220105.007/8030436:user/release-keys")) {
  do_bad_thing_with_params(d, e, f);
  return;
}
if (!strcmp(fingerprint, "google/oriole/oriole:12/SQ1D.220205.004/8151327:user/release-keys")) {
  do_bad_thing_with_params(g, h, i);
  return;
}
if (!strcmp(fingerprint, "google/oriole/oriole:12/SQ3A.220705.003/8671607:user/release-keys")) {
  do_bad_thing_with_params(j, k, l);
  return;
}
etc
```

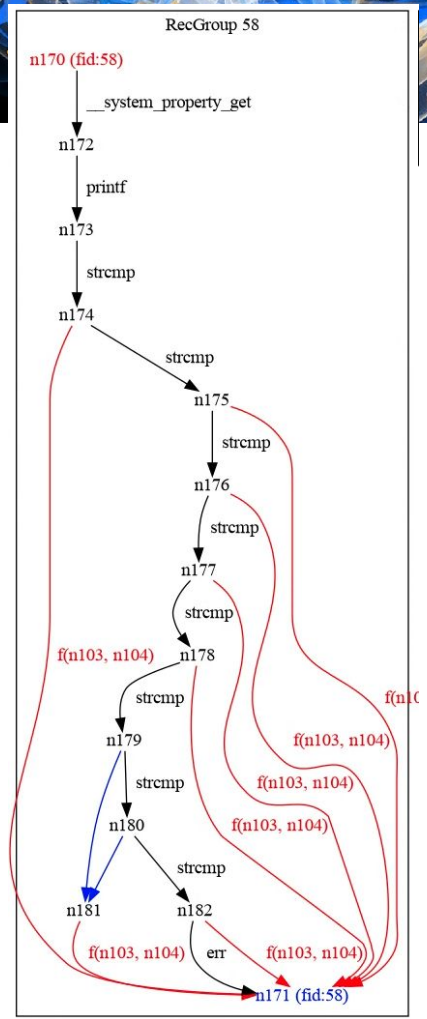

```
Report Findings (arm32 binary)
-------------String Obfuscation Section Start--------------
Function `sub_0x3e13e64` decrypts string `mount -o remount,rw /system`
Function `sub_0x3e13e64` decrypts string `cat `
Function `sub_0x3e13e64` decrypts string `rm -r `
Function `sub_0x3e13e64` decrypts string `rm `
Function `sub_0x3e13e64` decrypts string `chmod 0777 `
Function `sub_0x3e13e64` decrypts string `chmod 0644 `
Function `sub_0x3e13e64` decrypts string `chown root:root `
Function `sub_0x3e13e64` decrypts string `chown root.root `
Function `sub_0x3e13e64` decrypts string `chcon `
Function `sub_0x3e13e64` decrypts string `u:object_r:misc_user_data_file:s0 `
Function `sub_0x3e13e64` decrypts string `u:object_r:zygote_exec:s0 `
Function `sub_0x3e13e64` decrypts string `/sdcard/.google/`
Function `sub_0x3e13e64` decrypts string `com.android.google.cdcore.db`
Function `sub_0x3e13e64` decrypts string `/system/etc/.uatyes`
Function `sub_0x3e13e64` decrypts string `/data/dalvik-cache/arm`
Function `sub_0x3e13e64` decrypts string `system@framework@boot-thirdcd.oat`
Function `sub_0x3e13e64` decrypts string `tmpfiles/`
Function `sub_0x3e13e64` decrypts string `/data/local/tmp/`
Function `sub_0x3e13e64` decrypts string `asbymol`
Function `sub_0x3e13e64` decrypts string `bdlomsd`
Function `sub_0x3e13e64` decrypts string `jkpatch`
Function `sub_0x3e13e64` decrypts string `watch_dog`
Function `sub_0x3e13e64` decrypts string `cash`
Function `sub_0x3e13e64` decrypts string ` -ai `
Function `sub_0x3e13e64` decrypts string ` +ai `
Function `sub_0x3e13e64` decrypts string `/data/dalvik-cache/arm/system@framework@boot-bridacco.oat`
Function `sub_0x3e13e64` decrypts string `/data/dalvik-cache/arm64/system@framework@boot-bridacdo.oat`
Function `sub_0x3e13e64` decrypts string `/data/dalvik-cache/arm/system@framework@boot.oat`
Function `sub_0x3e13e64` decrypts string `/data/dalvik-cache/arm64/system@framework@boot.oat`
Function `sub_0x3e13e64` decrypts string `/data/dalvik-cache/arm/system@framework@boot-acco.oat`
Function `sub_0x3e13e64` decrypts string `/data/dalvik-cache/arm64/system@framework@boot-acdo.oat`
Function `sub_0x3e13e64` decrypts string `/system/lib/binder.so`
Function `sub_0x3e13e64` decrypts string `/system/lib64/binder.so`
Function `sub_0x3e13e64` decrypts string `/system/lib/libmedia_jni.so`
Function `sub_0x3e13e64` decrypts string `/system/lib64/libmedia_jni.so`
```

Stopping exploitation

- Mitigations
  - ARM Memory Tagging Extension
  - First handset with MTE on the market
- Secure development practices
  - Rust in Linux and Android
  - OEM Portal - restricted access
    - https://docs.partner.android.com/security/oem-edu/driver-developers
- Detecting impossible conditions

```
oriole:/data/local/tmp $
```

```
oriole:/data/local/tmp $
```

“N-days function like 0-days on Android”

-Maddie Stone, Security Researcher, Threat Analysis Group (TAG)

Android Partner Vulnerability Initiative APVI

3P Vulns - Findings

- **80+ disclosed APVI OEM vulnerabilities**
  - 1300+ GPSRP vulns
  - 1600+ SoC vulns

- Filed **~30 bugs in 2023** by Android Security Team
  - 5 Disclosed Page UAF
  - Other Page Corruptions: map2anywhere, map2oobpages…

- **bugs.chromium.org/p/apvi**
  - Moving to issuetracker in 2024

Closing the Gap

- **Developers** help OEMs implement & improve security processes
  - Decrease time from ingestion to patch
    - Reinforce policies with technical measures

- **Researchers**
  - GPU security is still under-researched

- More to come…

Thank You